DRAM

WHAT ARE DRAMS?

- Another flavor of RAM
- Much more efficient density than SRAM
- Much slower due to significant overheads
- Very fragile storage
- Necessary complement for SRAM
  - Stores large scale data in main memories
- Hard to integrate

4 TRANSISTOR DRAM CELL

- Remove the two PMOS loads from SRAM cell
- One of the two nodes Q and Q’ will become high impedance during storage
- Cell has redundant positive feedback, even though storage is dynamic

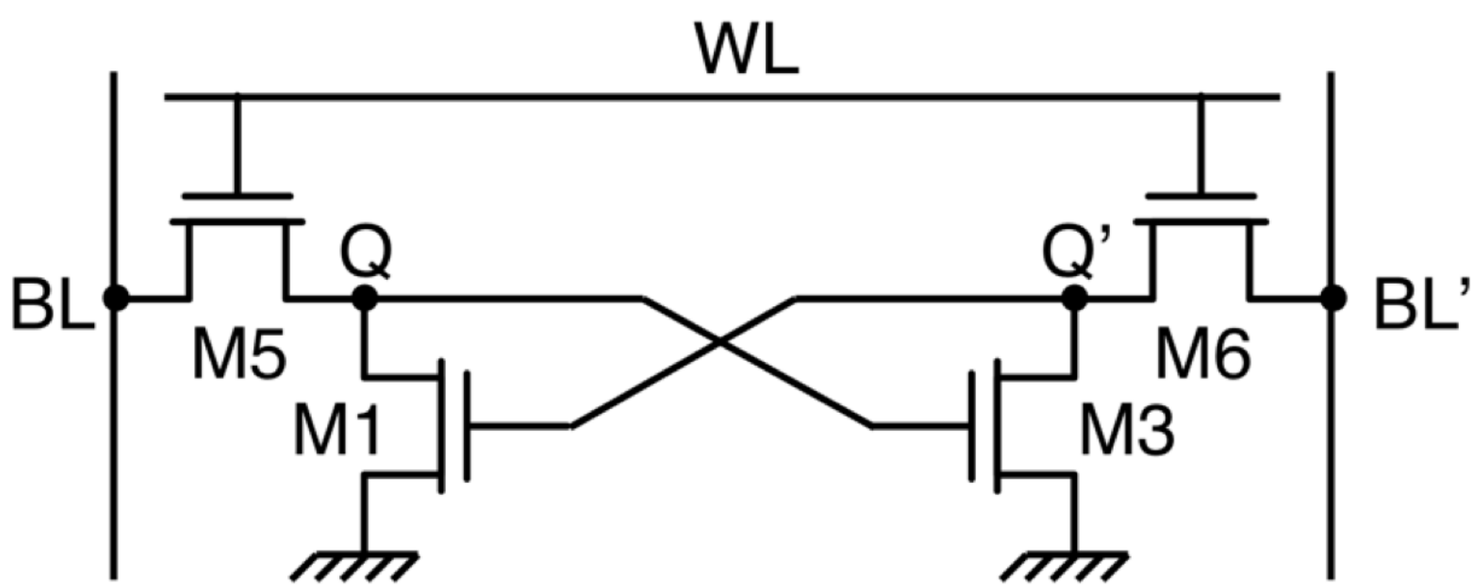

3 TRANSISTOR DRAM CELL

- Storage node is always dynamic
- Reading: precharge read line, enable RE
  - Charge sharing takes place
- Separate lines and controls for the read and write

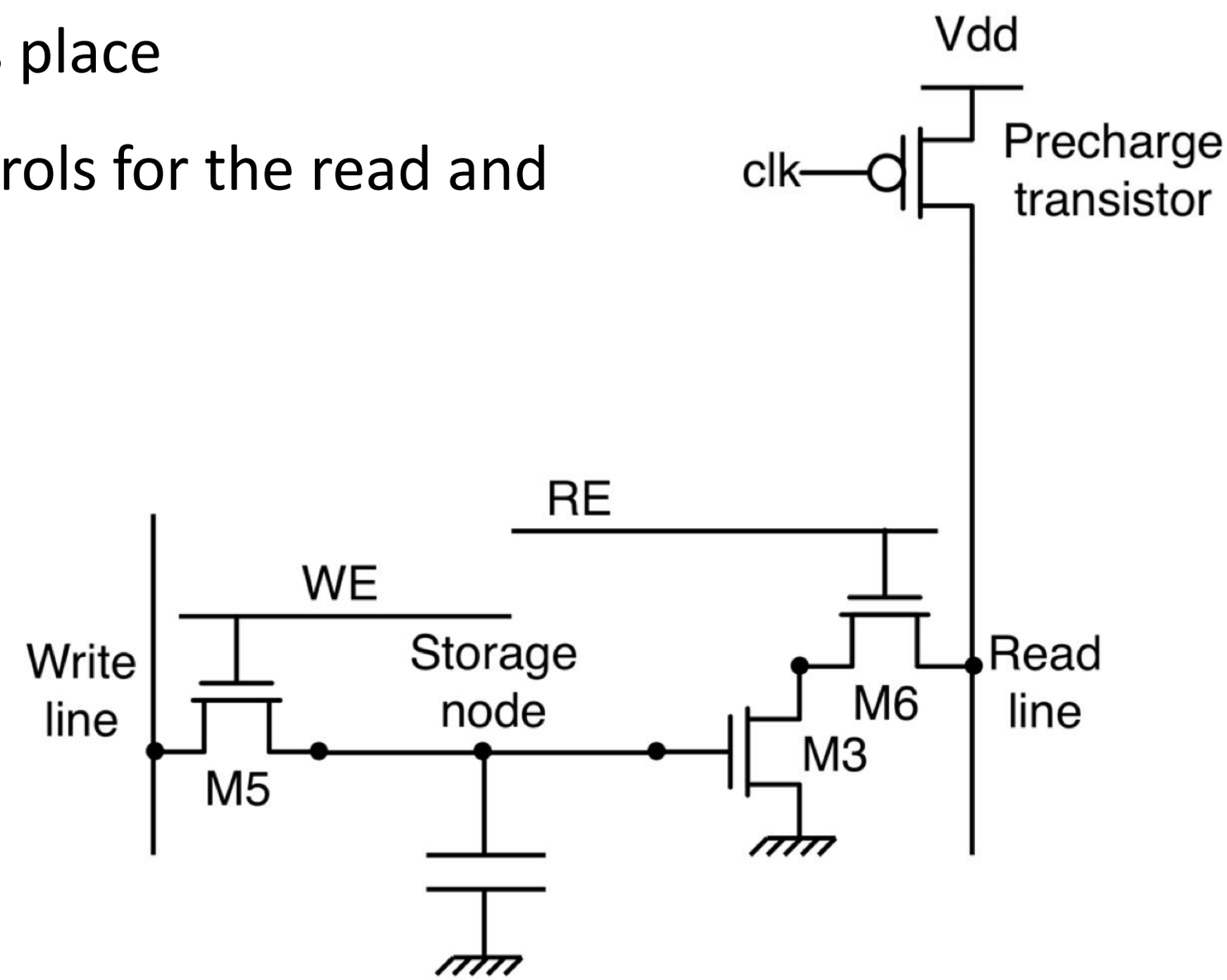

3 TRANSISTOR DRAM CELL: Writing

- Writing: drive the write line
- WE=1 and RE=0
- The storage node is written
  - Loss of Vth while writing ‘1’ unless …
- Then put WE=0 and RE=0
- The node will be high impedance

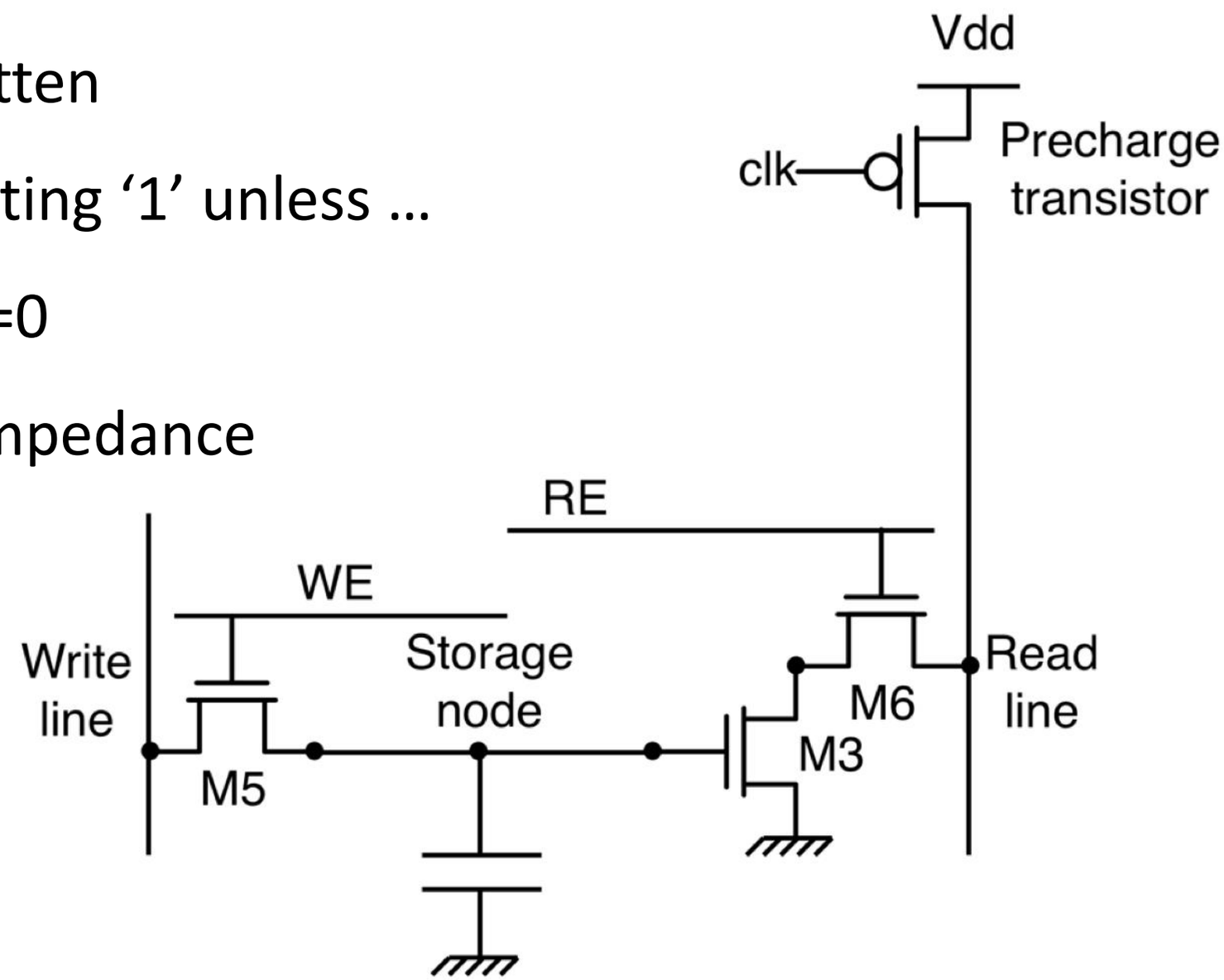

3 TRANSISTOR DRAM CELL: Reading

- Precharge phase CBL
- WE=0 and RE=1
- Storage node is high impedance
- Non-destructive read
- No need for additional capacitor

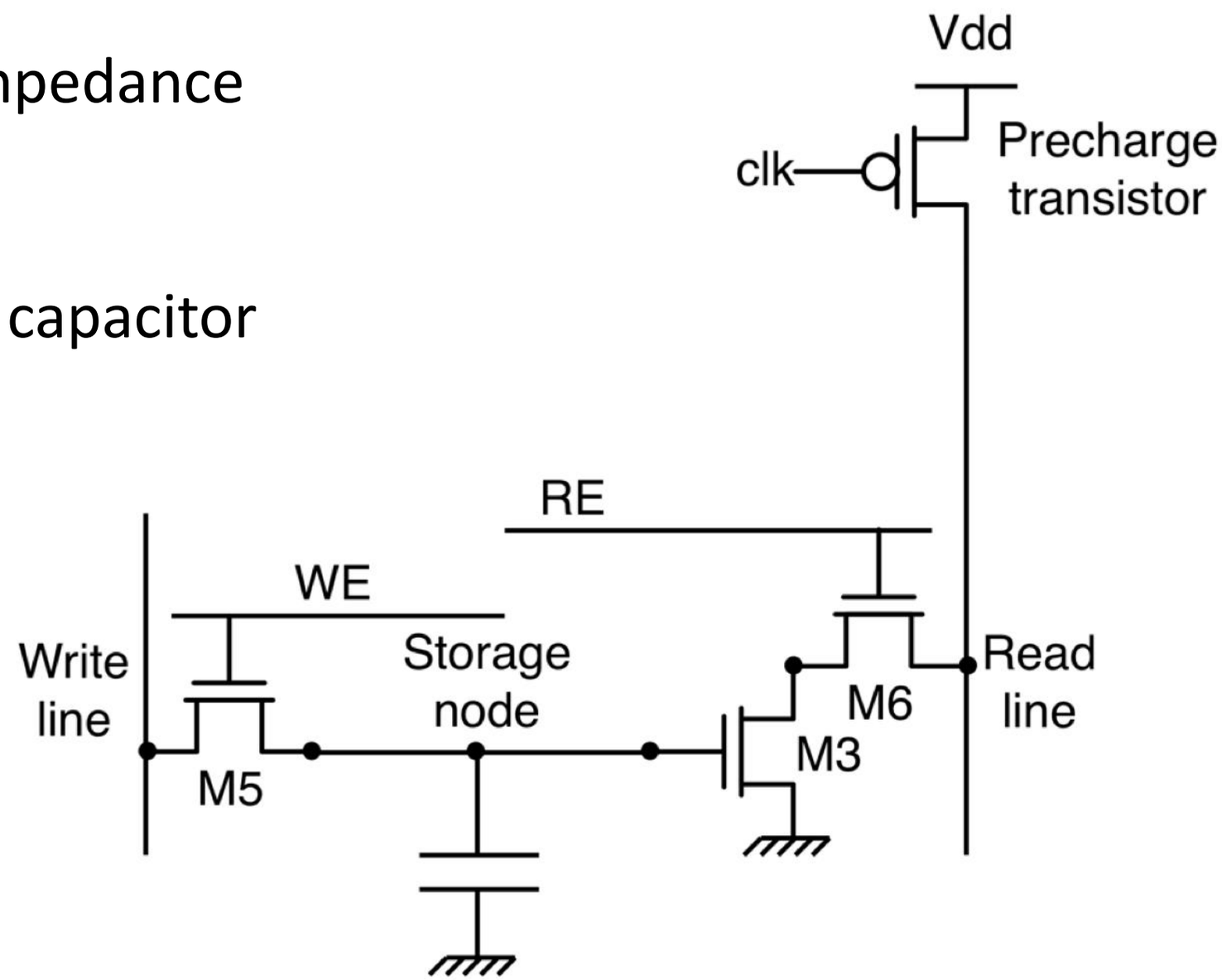

LAYOUT OF 3 TRANSISTOR DRAM CELL

- No especial layers
- Storage node could be the parasitic
- Can be embedded
-

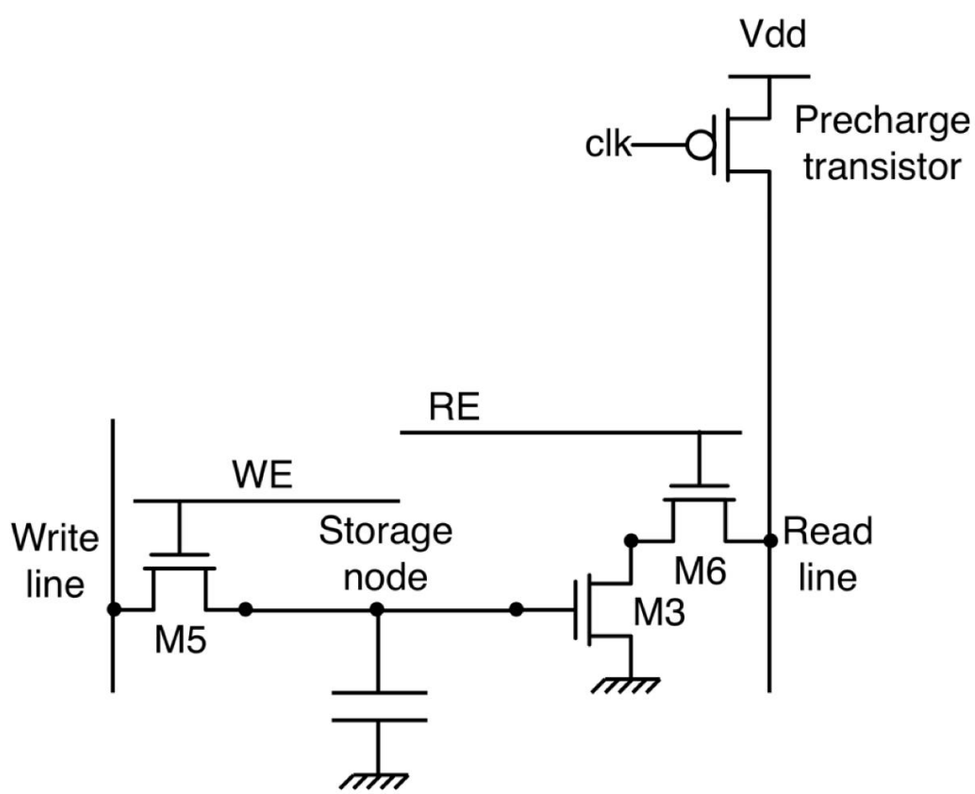

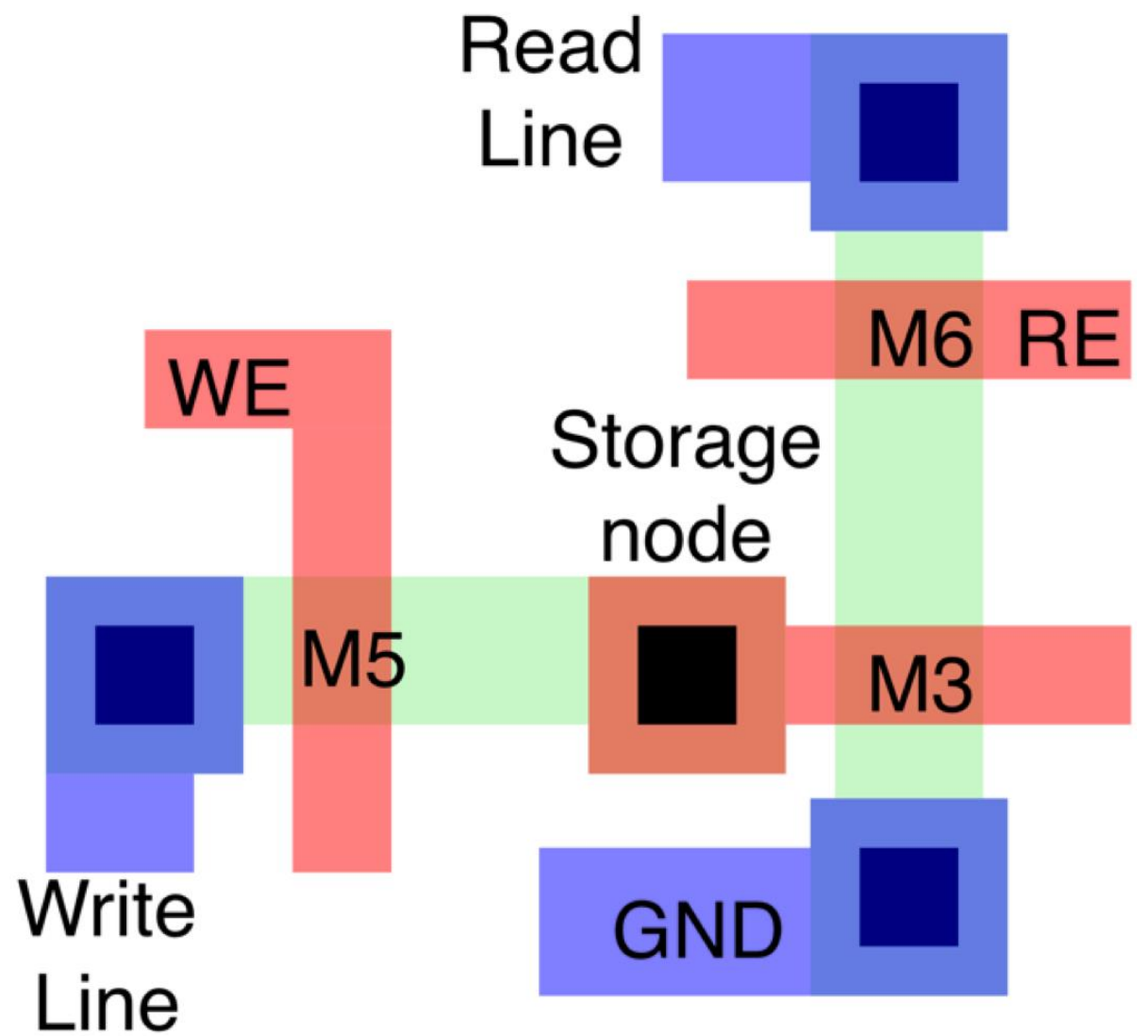

1 TRANSISTOR DRAM CELL

- Single bit line for write and read
- High density and cheap
- Cannot depend on drain for Cs
  - Need additional caps
- To write, drive value on BL and enable WL
- Read cycle is quite complicated

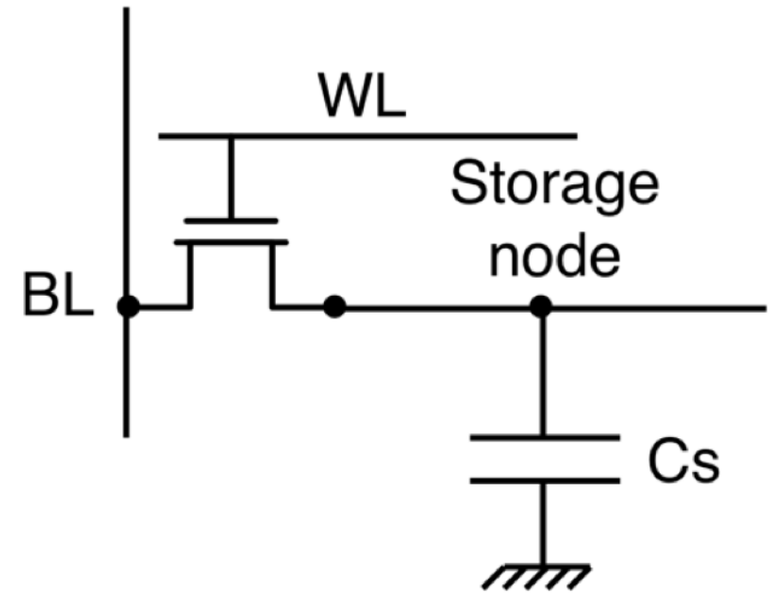

1 TRANSISTOR DRAM CELL-write

- Drive the value on the BL
- Enable WL
- Stored value is VDD-Vth
- Then put WL=0
- The value will be stored on the cap"high impedance"

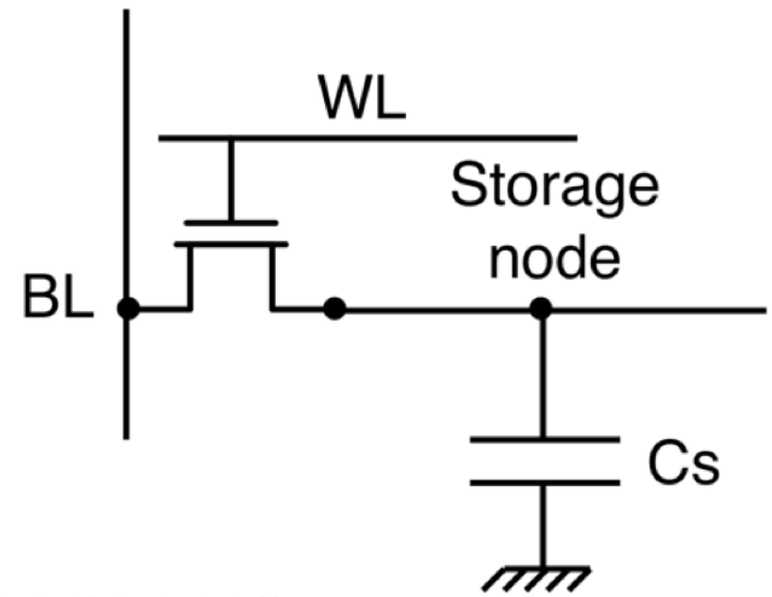

1 TRANSISTOR DRAM CELL-READ

- Normal precharge phase
- Then enable WL
- The BL is high impedance
- Reading is by charge sharing

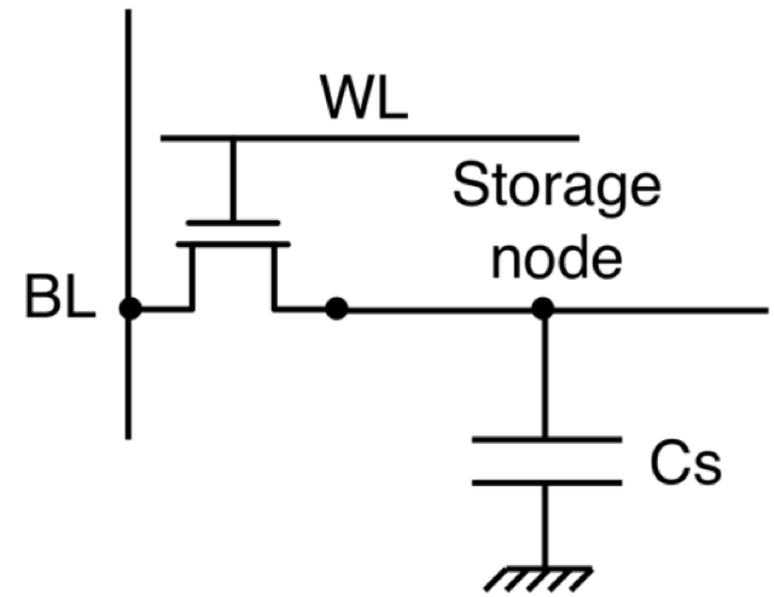

Charge before WL enabled = Charge after WL enabled

$$C_{bl}V_{pre} + C_sV_{stored} = C_{bl}V_{read} + C_sV_{read}$$

$$V_{read} = \frac{C_{bl}V_{pre} + C_sV_{stored}}{C_{bl} + C_s}$$

$$V_{read'0'} = \frac{C_{bl}}{C_{bl} + C_s}V_{DD}$$

$$V_{read'1'} = V_{DD}$$

- We must add explicit capacitor. We cannot rely on the parasitic only

NOTES ON DRAM READING

- Charge sharing based
  - Destructive reading
- Maximum swing is very small
  - Sense amplification a must
- But DRAM is single ended
  - Latch amps are differential

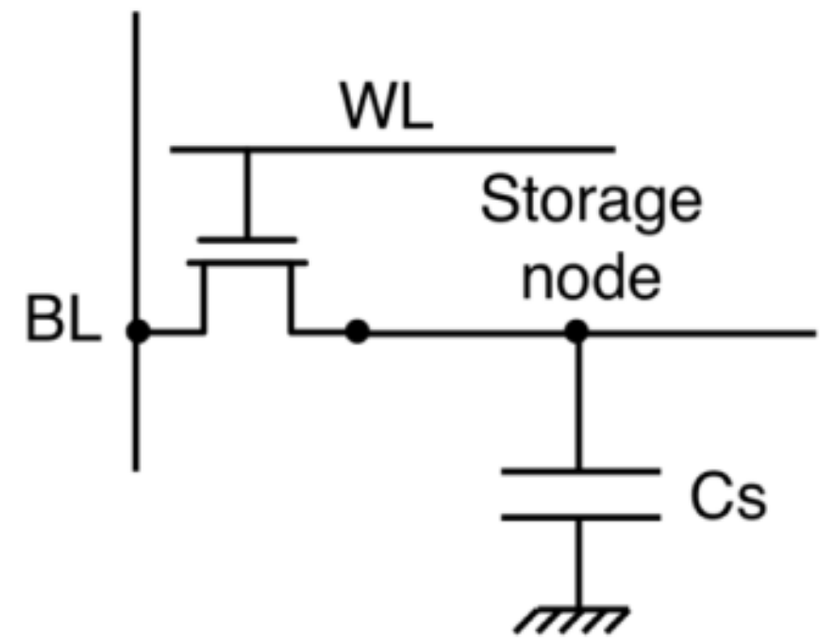

$$V_{read} = \frac{C_{bl}V_{pre} + C_s V_{stored}}{C_{bl} + C_s}$$

$$V_{read'1'} = \frac{C_{bl}V_{DD}/2 + C_s V_{DD}}{C_{bl} + C_s} = \frac{V_{DD}}{2}\left(\frac{C_{bl} + 2C_s}{C_{bl} + C_s}\right) = \frac{V_{DD}}{2}\left(1 + \frac{C_s}{C_{bl} + C_s}\right)$$

$$V_{read'0'} = \frac{C_{bl}V_{DD}/2 + C_s.0}{C_{bl} + C_s} = \frac{V_{DD}}{2}\left(\frac{C_{bl}}{C_{bl} + C_s}\right) = \frac{V_{DD}}{2}\left(1 - \frac{C_s}{C_{bl} + C_s}\right)$$

CHALLENGES ON DRAM READING

- Difference between “1” and “0” is small
- Cs has to be large
- We cannot reach “0” or “1” even if we permit enough time
- We must use sense amplifier
  - Derive the lines to full swing
  - Faster response
- Reading is destructive
- Leakage

LAYOUT OF 1 TRANSISTOR DRAM ARRAY

- Lower plate runs along vertically
- No longer run WL in poly horizontally
- BL now needs to run in diffusion
- Upper plate formed by diffusion
  - Creates non-linear capacitor
- No especial layers are used

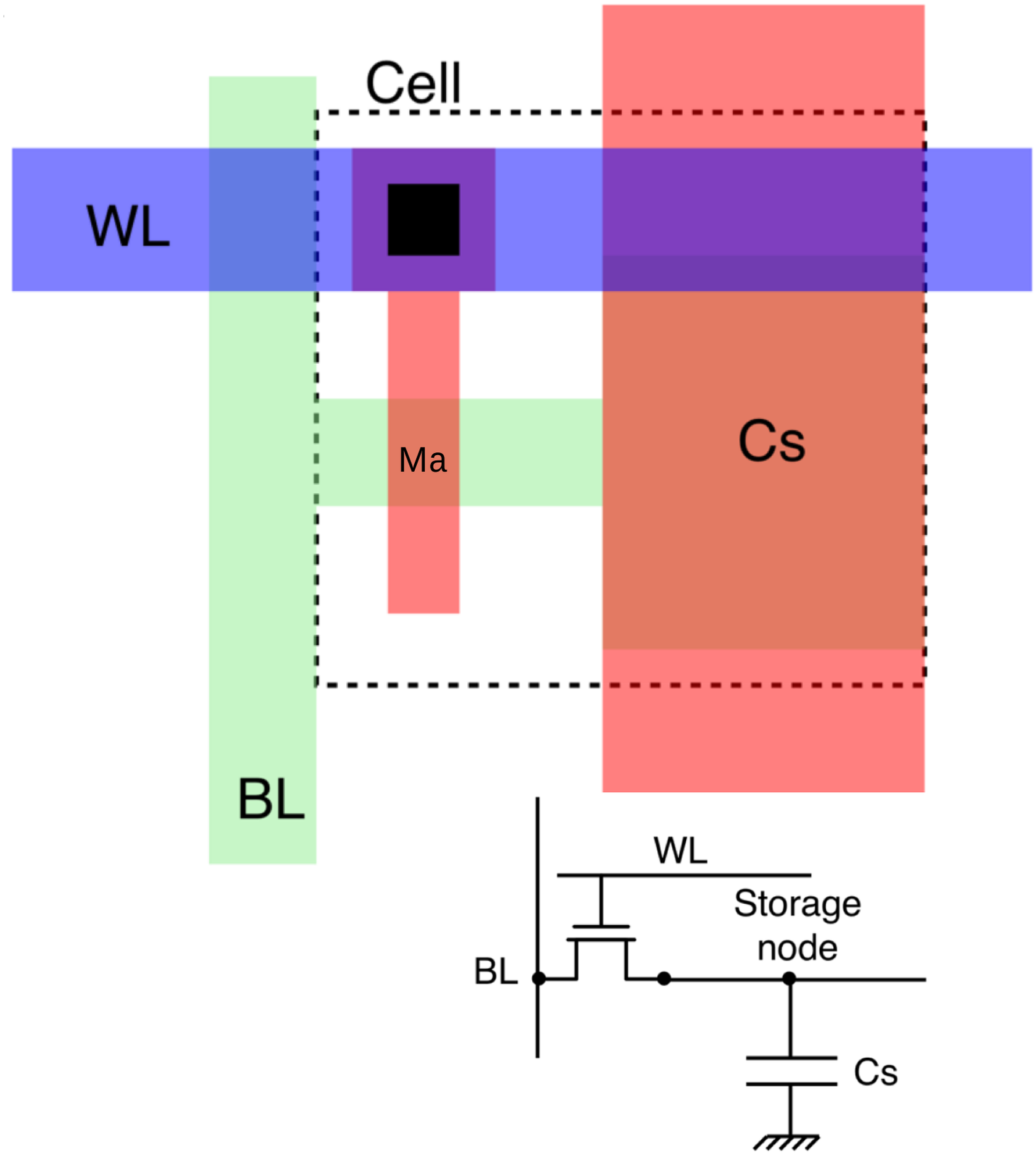

LINEAR CAPACITORS

- Poly2 used to form upper plate of storage cap
- Can no longer embed in traditional CMOS process
- You need especial layer “poly2”

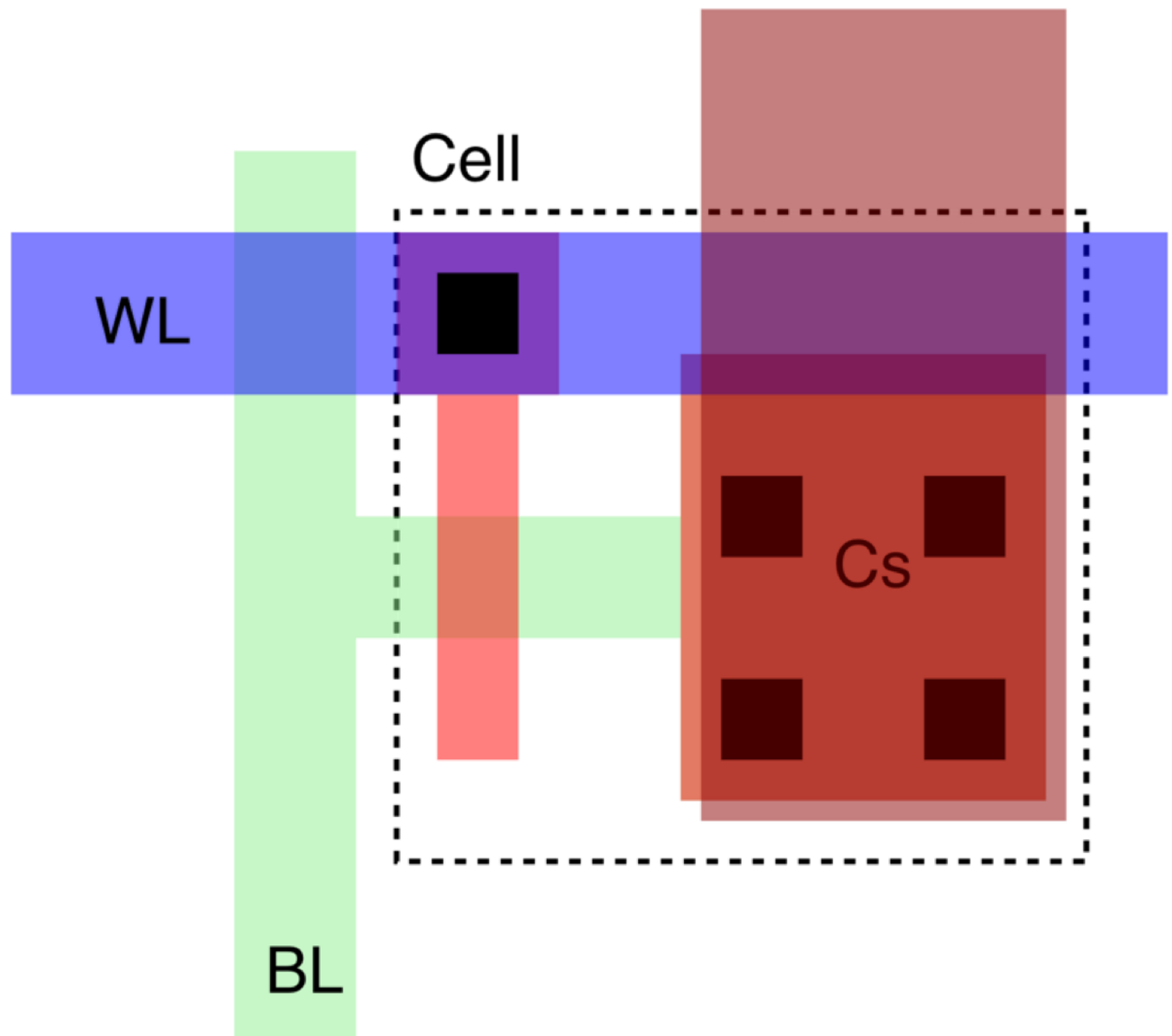

DRAM ARRAY

- Arrange DRAM cells in columns
- When a cell is enabled on a side, the dummy on the other is enabled

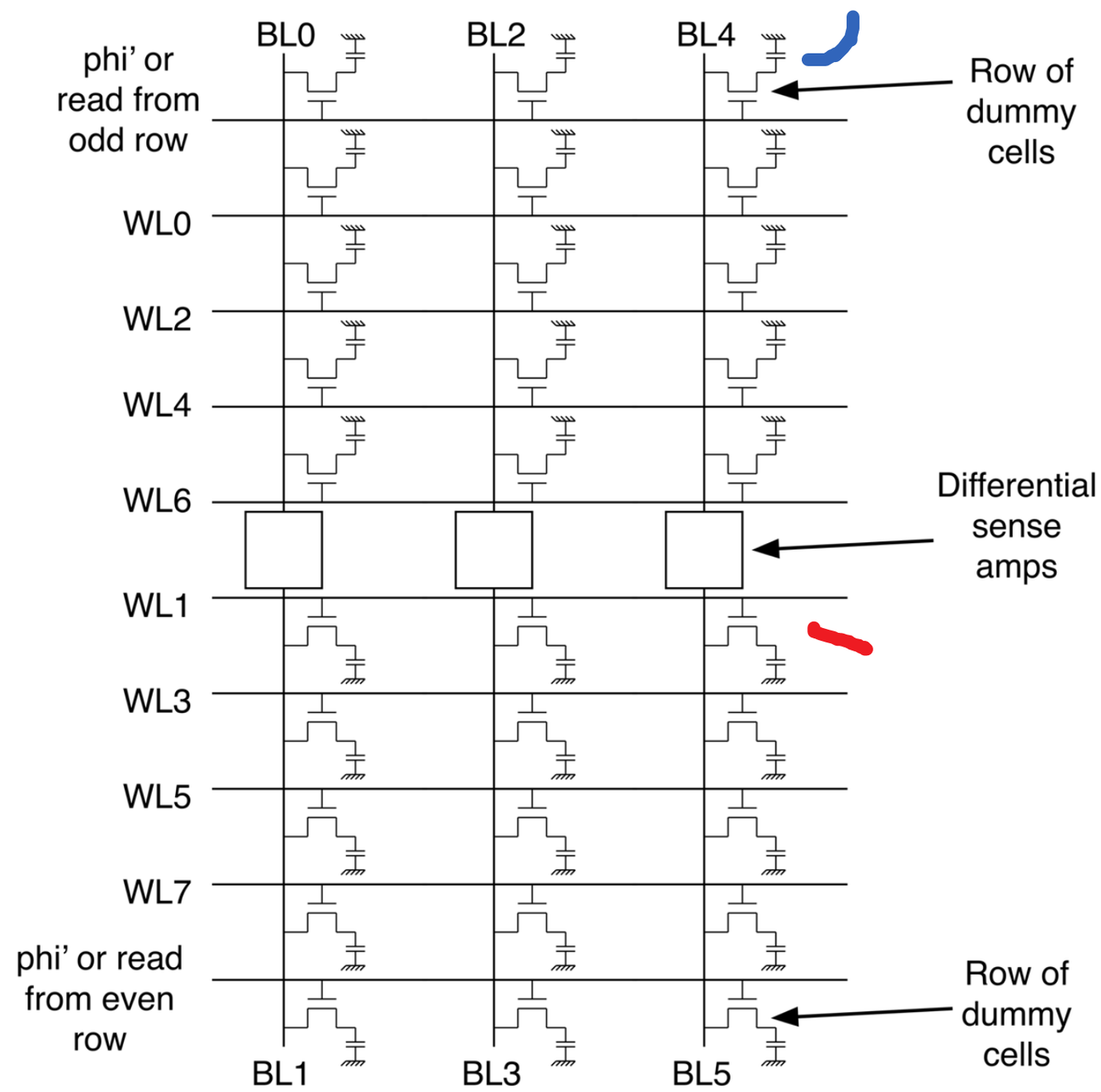

FOLDED DRAM ARRAY

- Dummy cell always stores Vdd/2
- Can also be completely empty and achieve the same effect

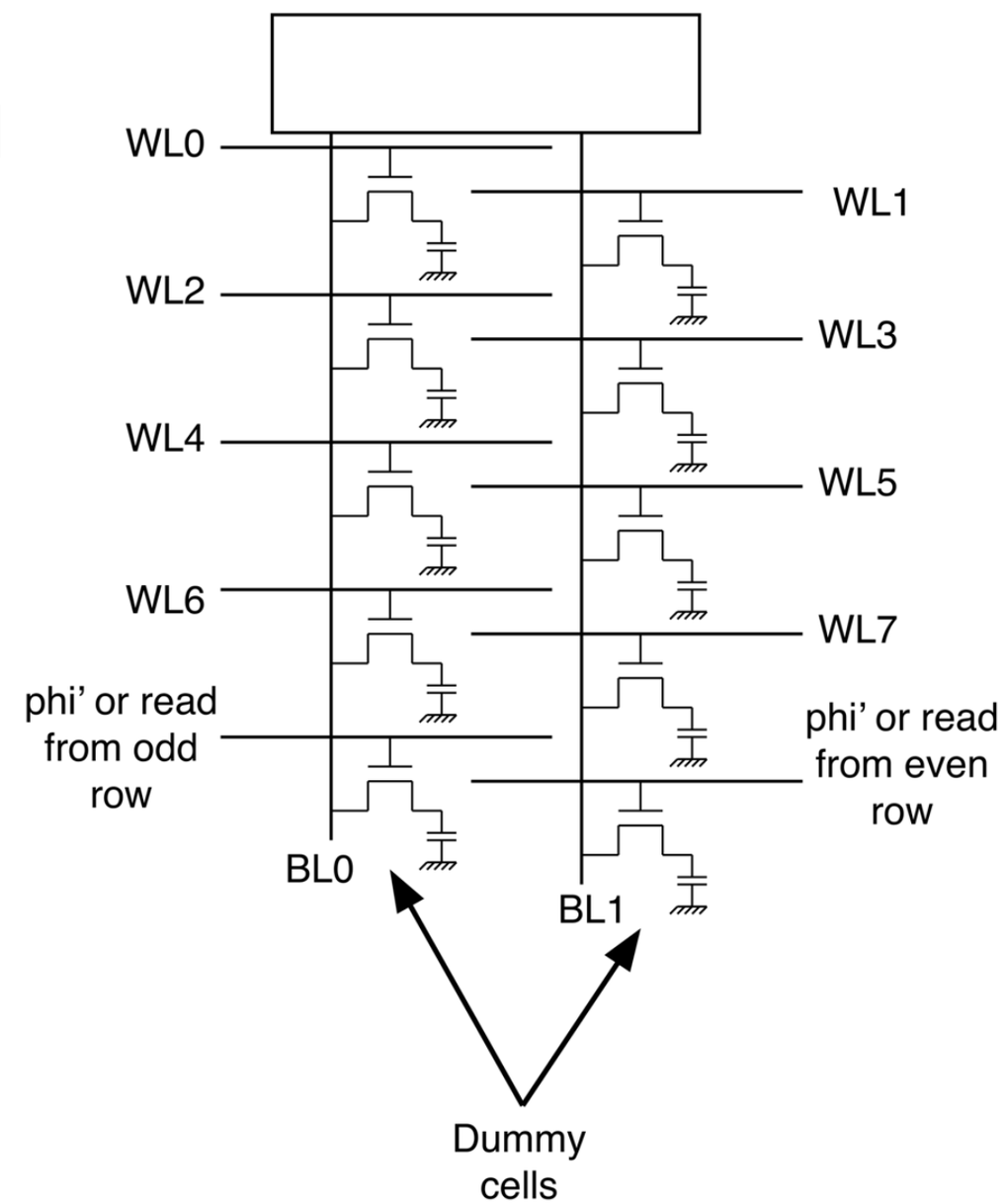

DRAM WRITE DELAY

- Drive the bit line with the required value
  - Be cognizant that this is an RC delay
- Enable WL (lumped C)
- Allow time for cell charging

$$t_{DRAM-write} = t_{drive} + t_{wl} + t_{cell}$$

$$t_{cell} = 0.69 R_{cell} C_s$$

DRAM READ DELAY

- Precharge bit lines to Vdd/2
- Enable WL
- Allow enough time for charge sharing
- Enable SA and allow time for switching
- Enable column decoder and allow it to produce output
  - Becomes driven value on BL
- Drive WL again
- Allow cell to switch to full swing

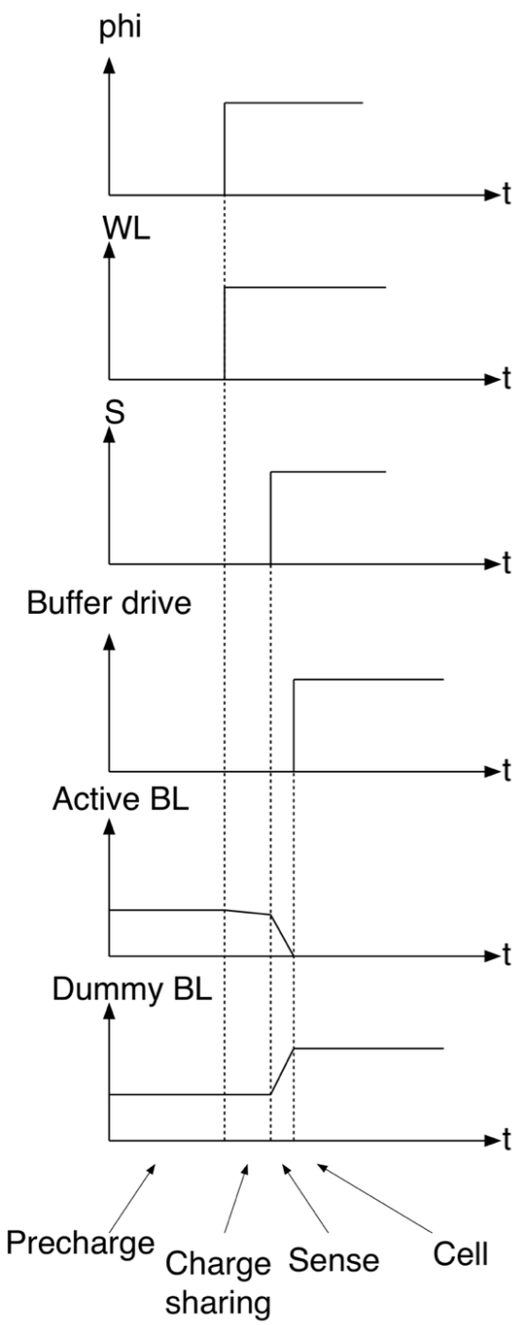

READ EVENTS

$$t_{DRAM-read} = t_{prech} + t_{wl} + t_{sharing} + t_{sense} + t_{drive} + t_{cell}$$

$$t_{sharing} = 0.69 * R_{NMOS}C(\text{Sharing voltage swing})/(V_{DD}/2)$$

- t_{prech} is similar to the NAND ROM
- t_{wl} similar to the writing one
- $t_{sharing}$ required time for the charge to settle. Usually very small
- t_{sense} similar to the SRAM calculations
- t_{drive}+ t_{cell} ~writing time

LEAKAGE AND REFRESH

- DRAM needs refreshing
- Determined by amount of leakage and size of capacitor

$$\Delta t = C_s \Delta V / I_{leakage}$$

REFRESH CYCLE

- Every Δt we need a full read cycle even if we do not intend to read
- This is usually done a row at a time
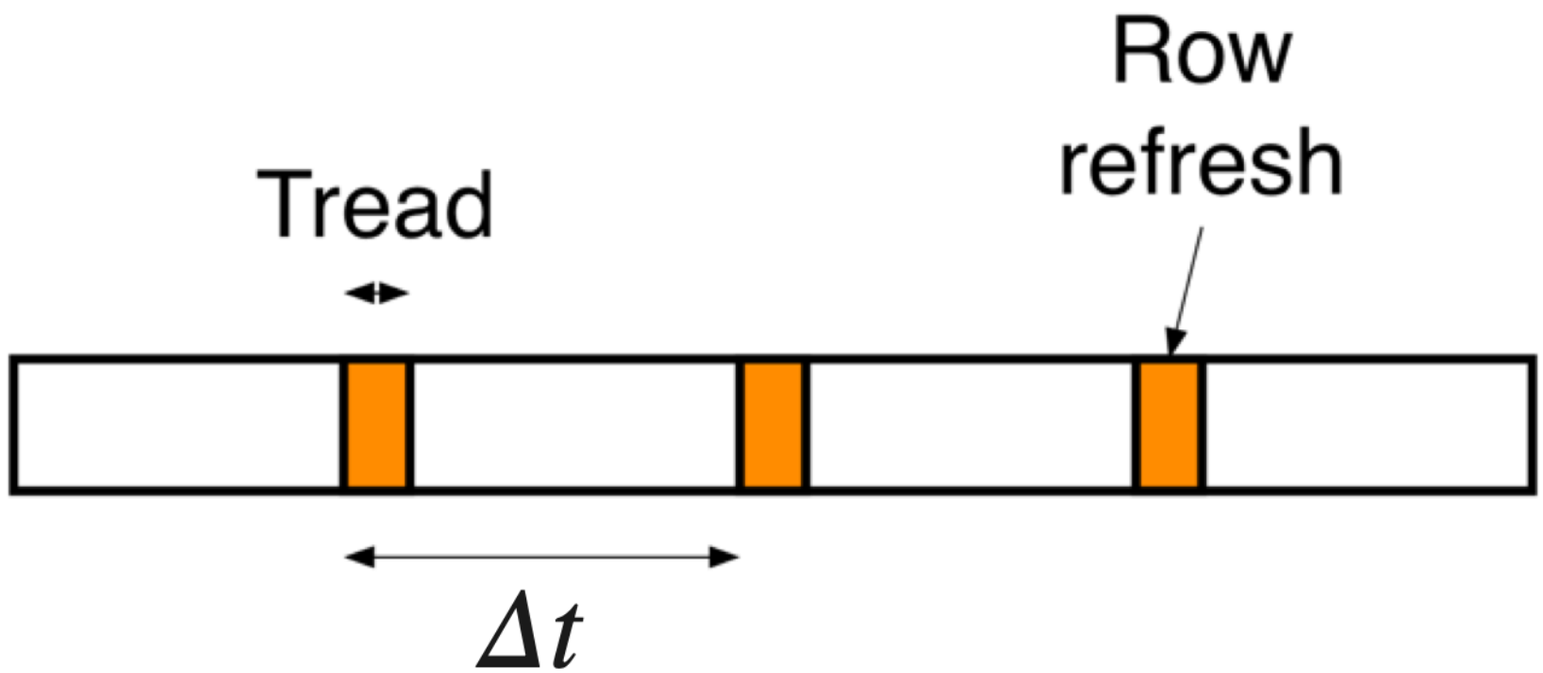
$$refresh_overhead = t_{DRAM-read}/(C_s \Delta V / m I_{leakage})$$